

CENTRAL ASIAN JOURNAL OF INNOVATIONS ON TOURISM MANAGEMENT AND FINANCE

https://cajitmf.casjournal.org/index.php/CAJITMF

Volume: 07 Issue: 03 | July 2026 ISSN: 2660-454X

Article

Informal Retail Digitization and Last-Mile Stockout Mitigation of FMCG Companies in Rivers State

David Babatunde Odefenwa[1], Thomas Chinye Okoisama[2]*

1. University of Port Harcourt Business School, Port Harcourt, Nigeria
2. University of Port Harcourt, East West Road, Port Harcourt, Nigeria

* Correspondence: okoisamatom@gmail.com

Abstract: The persistent incidence of last-mile stockouts within the informal fast-moving consumer goods retail channel of Rivers State, Nigeria, manifested through recurrent shelf shortages, lost sales, and sluggish restocking, constitutes a structural constraint on firm competitiveness and consumer welfare. This study examined the relationship between informal retail digitization and last-mile stockout mitigation of FMCG companies in Rivers State, with informal retail digitization operationalised through B2B app procurement and real-time inventory tracking, and last-mile stockout mitigation operationalised through stockout frequency reduction and replenishment cycle velocity. Anchored on the Expectancy Disconfirmation Theory and the General Systems Theory, the study adopted a cross-sectional explanatory survey design. Primary data were obtained through a structured questionnaire administered to FMCG distributors in Rivers State, of which 210 copies were valid and usable, and the four hypotheses were tested at the 0.05 level of significance using Partial Least Squares-Structural Equation Modelling via SmartPLS. The measurement model satisfied all reliability and validity thresholds. The structural results revealed that B2B app procurement had a significant positive relationship with replenishment cycle velocity but a non-significant relationship with stockout frequency reduction, whereas real-time inventory tracking had a strong significant positive relationship with stockout frequency reduction but a non-significant relationship with replenishment cycle velocity. The study concludes that the two digital capabilities operate through distinct, non-substitutable pathways, with procurement digitization governing the speed of replenishment and real-time tracking governing the availability of stock. It recommends that FMCG firms deploy both capabilities in an integrated manner, coupling digital procurement with real-time visibility, automated reordering, and responsive last-mile logistics, to achieve comprehensive last-mile stockout mitigation across the informal retail channel of Rivers State.

Keywords: Informal Retail Digitization, B2B App Procurement, Real-Time Inventory Tracking, Last-Mile Stockout Mitigation, FMCG.

Citation: Odefenwa, D. B., & Okoisama, T. C. Informal Retail Digitization and Last-Mile Stockout Mitigation of FMCG Companies in Rivers State. Central Asian Journal of Innovations on Tourism Management and Finance 2026, 7(3), 471-494.

Received: 5th May 2026
Revised: 10th Jun 2026
Accepted: 7th Jul 2026
Published: 31st Jul 2026

Copyright: © 2026 by the authors. Submitted for open access publication under the terms and conditions of the Creative Commons Attribution (CC BY) license (https://creativecommons.org/licenses/by/4.0/)

1. Introduction

The fast-moving consumer goods (FMCG) sector occupies a strategic position in the Nigerian economy, standing as one of the most significant contributors to non-oil manufacturing output, value addition, employment generation and everyday household consumption in Africa's largest and most populous market. Firms operating within this space, spanning food and beverages, personal care items, household products and other daily-use goods, survive on a high-volume, low-margin logic in which profitability is realised only when products move rapidly and dependably from factories to the millions

of small outlets where the majority of Nigerians actually shop. This velocity-driven business model makes the sector acutely sensitive to distribution efficiency, yet FMCG supply chains in emerging economies remain constrained by deep structural bottlenecks arising from the complex interactions among manufacturers, wholesalers, retailers and consumers during physical distribution [1]. Beyond these systemic weaknesses, FMCG firms in Nigeria contend with fragmented distribution networks, weak supplier coordination, unreliable power and road infrastructure, and pervasive digital under-adoption that jointly depress organisational performance. Evidence from listed Nigerian FMCG firms demonstrates that sustainable and well-structured supply chain practices, including reverse logistics, supplier relationship management and greener operations, exert significant positive effects on organisational performance and stakeholder satisfaction, underscoring how far the sector still stands to gain from operational reform [2]. At the same time, the broader small and medium enterprise landscape within which most FMCG retailing occurs is hampered by infrastructural deficits, low digital literacy and uneven connectivity, all of which slow the diffusion of the very technologies that could relieve distribution pressure [3]. The convergence of these contributions and challenges frames the central operational question confronting the sector: how to keep products continuously available to the final consumer despite a distribution environment that is fragmented, informal and technologically uneven. Against this backdrop, the last mile that links distributors and their agents to neighbourhood kiosks, open-market stalls and container shops, has emerged as the decisive determinant of whether goods reach consumers at the moment and place of demand. Last-mile stockout mitigation refers to the deliberate managerial and technological effort to ensure that saleable inventory remains continuously available at the point of final sale by minimising both the incidence and the duration of out-of-stock conditions and by shortening the time required to restore depleted shelves. The last mile is widely acknowledged as the most time-consuming, expensive and failure-prone stage of the entire delivery system, such that its effectiveness has become a strategic rather than a merely operational concern for firms competing on availability and reliability [4]. Effective inventory management that guards against stockouts while absorbing demand and supply fluctuations has, in turn, been shown to be strongly associated with superior supply chain performance, confirming that availability at the shelf is not incidental but central to competitive success.

Two complementary proxies capture the essence of last-mile stockout mitigation within the FMCG context. The first, stockout frequency reduction, denotes the systematic lowering of the number of occasions on which a demanded item is unavailable at the retail shelf, thereby protecting sales that would otherwise be permanently lost when consumers substitute brands, defer purchases or switch stores in response to unavailability. The second proxy, replenishment cycle velocity, refers to the speed with which the interval between the detection of depleted stock and its physical replacement is executed, capturing the responsiveness of the restocking loop that connects retailer demand back to distributor supply [5]. The capacity of an FMCG firm to keep its last mile stocked is shaped by a constellation of antecedents identified across the operations and supply chain literature. These include logistics service quality and delivery responsiveness, disciplined inventory management practices, and supply chain traceability and visibility. In the Nigerian and broader African setting, the digitally mediated antecedent of greatest practical consequence is the digitization of the informal retail channel through which the overwhelming share of FMCG volume actually flows. Informal retail digitization is understood here as the integration of digital platforms, applications and connected tools into the procurement, inventory and replenishment operations of small, largely unregistered retail enterprises that have historically been served by opaque, multi-layered and inefficient wholesale supply chains. This study conceptualises informal retail digitization through two dimensions. The first, B2B app procurement, refers to the use of dedicated business-to-business applications and digital marketplaces through which informal retailers place orders directly with manufacturers and distributors, receive

scheduled deliveries and access embedded services, thereby collapsing several layers of intermediation [6]. The second dimension, real-time inventory tracking, refers to the continuous digital monitoring of stock positions and movement that furnishes both retailer and supplier with timely, accurate visibility over what is selling, what is depleting and what requires replenishment. It is against this background that the present study examines the relationship between informal retail digitization and last-mile stockout mitigation of FMCG companies in Rivers State.

Notwithstanding the strategic centrality of the last mile to competitive survival, FMCG companies operating in Rivers State continue to grapple with poor last-mile stockout mitigation. The core problem is the persistent and recurrent unavailability of demanded products at the numerous informal retail outlets on which these firms depend, compounded by sluggish and poorly coordinated replenishment that leaves shelves empty for extended periods before depleted stock is restored. In an environment where consumers form expectations of continuous availability and readily punish disappointment, the failure to keep the last mile stocked converts a logistics weakness into a direct threat to revenue, market share and brand loyalty, and it does so in a distribution landscape that remains fragmented, manual and technologically uneven [7]. The problem manifests in several visible and measurable ways. Informal retailers repeatedly encounter empty shelves and unfulfilled orders, are compelled to undertake emergency restocking trips to distant markets when preferred products run out, and experience long and unpredictable order-to-delivery intervals that disrupt their trading. Consumers, confronting the absence of the brands they seek, respond by switching brands, deferring purchases or abandoning the outlet altogether, a pattern of behaviour that translates unavailability into permanent lost sales and diminished loyalty. These manifestations are aggravated by the slow replenishment velocity characteristic of the traditional wholesale chain, in which the interval between the detection of depleted stock and its physical replacement stretches well beyond the tolerance of a fast-moving product category. The causes of the problem are rooted in both structural and technological deficiencies. The multi-layered distribution chains that link FMCG manufacturers to informal outlets introduce excessive intermediation, information loss and coordination failure, while paper-based and manual ordering deprives both retailer and supplier of accurate, timely knowledge of stock positions and demand signals. Weak demand forecasting, unreliable power and connectivity, poor road infrastructure and low digital literacy further impede the flow of goods and information, slowing replenishment and inflating the frequency of stockouts [8]. The effects of poor last-mile stockout mitigation are substantial and self-reinforcing. Firms forfeit sales and margin at the precise moment of consumer demand, erode the trust and loyalty that underpin repeat purchase, and risk the attrition of the informal retailers who constitute their distribution backbone. At the system level, chronic stockouts tie up working capital in emergency measures, degrade competitiveness and undermine the very supply chain performance that disciplined availability management is meant to secure. Various scholars have proffered solutions to the broad challenge of availability and distribution efficiency. Some have emphasised disciplined inventory management as the guarantor of stock availability and supply chain performance, while others have advanced supply chain agility and responsiveness as the capability that allows firms to synchronise supply with volatile demand. A further stream has focused on logistics service quality and delivery responsiveness as levers of customer satisfaction and logistics performance in emerging markets. Notwithstanding these contributions, important gaps persist in the literature. First, the preponderance of existing evidence is drawn from formal, large-scale or public-sector organisations and from contexts outside Nigeria, including hospital pharmacies in Bahrain, manufacturing firms in Ghana, emerging markets in Latin America, and FMCG supply chains in South Asia, leaving the distinctive dynamics of Nigeria's informal retail channel largely less examined. Also, there is a marked scarcity of rigorous, PLS-SEM-based empirical evidence focused specifically on FMCG companies in Rivers State. The point of departure of this study, therefore, lies in

its examination of the relationship between informal retail digitization, operationalised through B2B app procurement and real-time inventory tracking, and last-mile stockout mitigation, operationalised through stockout frequency reduction and replenishment cycle velocity, among FMCG companies in Rivers State [9].

1.1 Objectives of the Study

The specific objectives of the study were to:

(i) examine the relationship between B2B app procurement and stockout frequency reduction of FMCG companies in Rivers State;
(ii) assess the association between B2B app procurement and replenishment cycle velocity of FMCG companies in Rivers State;
(iii) examine the relationship between real-time inventory tracking and stockout frequency reduction of FMCG companies in Rivers State; and
(iv) assess the association between real-time inventory tracking and replenishment cycle velocity of FMCG companies in Rivers State.

1.2 Complementary Theories

This study is anchored on two complementary theories, the Expectancy Disconfirmation Theory and the General Systems Theory.

1.2.1 Expectancy Disconfirmation Theory (EDT): was propounded by Richard L. Oliver in 1980, extending his earlier 1977 formulation, and it conceptualises satisfaction as a function of the gap between the expectations a person forms prior to using a product or service and the performance they subsequently perceive, such that confirmation or positive disconfirmation breeds satisfaction while negative disconfirmation breeds dissatisfaction and, ultimately, altered intention. Scholarly engagement with the theory has since migrated from its consumer-marketing origins into information systems, service and technology-adoption research, where recent evidence both affirms and qualifies its core propositions; a meta-analysis of the expectancy-disconfirmation model across public services confirms the robust and generalisable link between disconfirmation and satisfaction, yet simultaneously exposes measurement heterogeneity and calls for methodological refinement in how disconfirmation is captured, while a comparative modelling study finds that the disconfirmation model attains the best fit on some indices but the weakest on others when set against the ideal-point and Kano formulations. The theory's strengths lie in its parsimony, its strong predictive record across diverse domains, and its capacity to connect cognition, affect and behaviour in a single, testable chain that is readily operationalised through structural equation modelling. Its weaknesses, however, are non-trivial: the difference-score operationalisation of disconfirmation is psychometrically contested, the model presumes a largely rational, deliberative process of expectation formation, and it tends to underweight the moderating force of affect, fairness perceptions and situational context, rendering it somewhat static in turbulent settings. For the present study, EDT is directly relevant because informal retailers and their customers form concrete expectations about whether demanded FMCG items will be available and how quickly depleted stock will be replaced.

1.2.2 General Systems Theory: was propounded by the biologist Ludwig von Bertalanffy, whose ideas developed from the 1940s and were consolidated in his 1968 work General System Theory (GST), and it was translated into the language of organisations and management most influentially by Kast and Rosenzweig, who framed the firm as an open system that draws inputs from its environment, transforms them through internal throughput processes, and returns outputs while adjusting through feedback. The theory advances the propositions of wholeness, interdependence, synergy, homeostasis and equifinality, insisting that a system's behaviour cannot be understood by examining its parts in isolation but only through the dynamic relations among them; contemporary management scholarship has revived this open-systems orientation, arguing that rigorous research must contextualise organisational phenomena within the interdependent environments in which they are embedded rather than treating firms as closed, steady-

state entities. The strengths of GST reside in its holistic, integrative and transdisciplinary character, its explicit accommodation of feedback and interdependence, and its natural fit with supply chains, which are quintessential open systems of interlinked actors and information flows. Its principal weaknesses are its high level of abstraction and generality, the difficulty of operationalising and empirically testing its constructs directly, and its tendency to describe rather than to predict, since the theory specifies that parts interact without always specifying the precise mechanism or the location of system boundaries [10]. GST is relevant to this study because the FMCG distribution network in Rivers State is best understood as an open system linking manufacturers, distributors, informal retailers and consumers through continuous flows of goods and information; informal retail digitization functions as the integrating mechanism that connects the procurement and inventory subsystems, tightens feedback loops and improves coordination.

1.3 Conceptual Framework

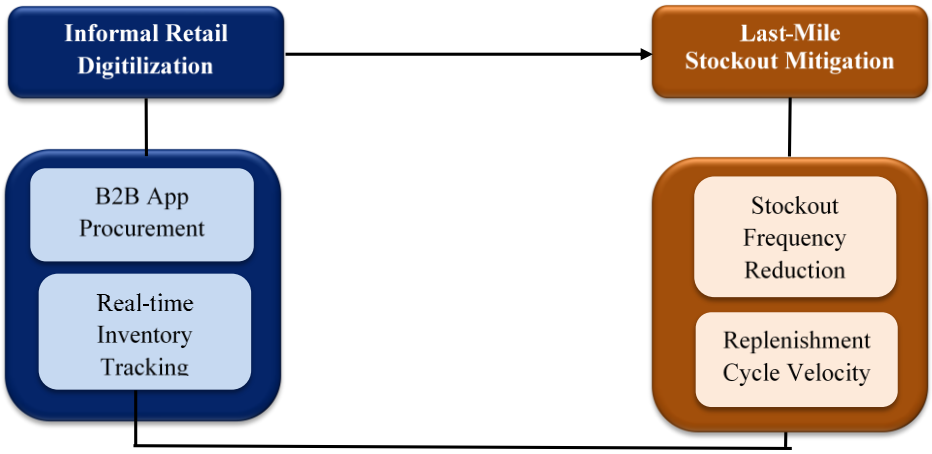

Figure 1. Conceptual Framework of informal retail digitization and last-mile stockout mitigation.

Source: Conceptualized by the Researcher. Dimensions of informal retail digitization were adapted from Musa et al. (2024); Masudin et al. (2021); Lee et al. (2022); Agyabeng-Mensah et al. (2021), while the measures of last-mile stockout mitigation were adpted from George and Elrashid (2023); Mbah et al. (2019); Michalski and Montes-Botella (2022) and Lin et al. (2023).

1.3.1 Informal Retail Digitization: refers to the integration of digital platforms, mobile applications and connected technologies into the procurement, inventory and replenishment operations of the small, largely unregistered retail enterprises, kiosks, open-market stalls and container shops, that dominate consumer-goods distribution in Nigeria and across Africa. Its conceptual salience is grounded in the empirical reality that the overwhelming share of FMCG volume in Nigeria flows through informal outlets historically served by opaque, multi-layered and inefficient wholesale chains, a structural condition that a wave of B2B platforms such as TradeDepot, Omnibiz, Sabi and Alerzo has sought to disrupt by digitising the distribution layer. The scholarly conversation, however, is far from settled. On one side, a strand of research is broadly optimistic, showing that the adoption of digital and smart supply-chain technologies significantly improves operational performance: evidence from FMCG manufacturers listed on the Nigerian Exchange indicates that intelligent and interconnected supply-chain technologies, coupled with smart technology, enhance operational efficiency, while a study of the food and beverage industry demonstrates that the digital supply chain significantly improves quality, productivity and cost-reduction performance [11]. On the other side, a more cautionary literature emphasises that digitization in Nigeria is uneven and fragile, constrained by infrastructural deficits, unreliable power and connectivity, and low digital literacy that blunt the diffusion and impact of these tools among SMEs, and that substantial

investment requirements and poorly structured value chains rank among the most critical impediments to technology adoption in emerging-economy FMCG supply chains.

1.3.2 B2B App Procurement: denotes the use of dedicated business-to-business applications and digital marketplaces through which informal retailers place orders directly with manufacturers and distributors, receive scheduled deliveries, and access embedded financing and analytics, thereby collapsing several layers of intermediation that traditionally separate the producer from the point of final sale. Conceptually, it is a specific, retail-facing instantiation of the broader e-procurement construct whose performance implications have been widely examined. A supportive body of evidence holds that e-procurement adoption reduces transaction costs, enhances transparency, strengthens buyer-supplier integration and improves supply-chain and organisational performance; a Nigerian study establishes that perceived usefulness is the strongest predictor of the intention to adopt e-procurement, an Indonesian manufacturing study shows that top-management support and information quality drive e-procurement implementation, which in turn improves company performance, and a Malaysian study confirms that e-procurement adoption significantly supports supply-chain performance, largely through mediated pathways [12]. Yet, Nigerian evidence finds that perceived ease of use exerts a significant negative effect on adoption intention, implying that simplistic assumptions about frictionless uptake are misplaced and that adoption dynamics differ across institutional settings.

1.3.3 Real-Time Inventory Tracking: refers to the continuous, digitally enabled monitoring of stock positions and movement, through mobile applications, Internet-of-Things sensors, radio-frequency identification and cloud dashboards, that furnishes both retailer and supplier with timely and accurate visibility of what is selling, what is depleting and what requires replenishment. The construct rests on a well-developed argument that supply-chain visibility is the antidote to the information asymmetries that generate shortages. Also, empirical work demonstrates that supply-chain traceability augments logistics practices to deliver superior business and environmental outcomes in African manufacturing, and that machine-learning techniques applied to real-time data can optimise inventory and replenishment decisions. The critical counterpoint, however, is that the realisation of these gains is contingent rather than automatic, as visibility technologies demand infrastructural readiness, managerial capability and inter-organisational trust that are frequently absent in Nigeria's informal retail environment. This mismatch between the promise of real-time visibility and the conditions under which it is deployed in Nigeria constitutes a clear research gap [13].

1.3.4 Last-Mile Stockout Mitigation: Last-mile stockout mitigation is the deliberate managerial and technological effort to ensure that saleable inventory remains continuously available at the point of final sale by minimising both the incidence and the duration of out-of-stock conditions and by shortening the time required to restore depleted shelves. The concept acquires particular weight in the Nigerian FMCG context because the last mile, the segment connecting distributors and their agents to informal outlets, is simultaneously the most time-consuming, the most expensive and the most failure-prone stage of the delivery system, and its effectiveness has become a strategic rather than a merely operational concern [14]. Scholarly argument converges on the view that availability at the shelf is not incidental to competitiveness but central to it, since disciplined inventory management that guards against stockouts while absorbing demand and supply fluctuations is strongly associated with superior supply-chain performance. The implication for practice is that firms which fail to mitigate last-mile stockouts forfeit sales at the moment of demand, erode consumer trust and risk the attrition of the retailers on whom they depend, whereas those that succeed convert reliable availability into loyalty and market share.

1.3.5 Stockout Frequency Reduction: denotes the systematic lowering of the number of occasions on which a demanded FMCG item is unavailable at the retail shelf, and it

captures the reliability dimension of last-mile stockout mitigation [15]. The construct is anchored in evidence that structured inventory practices materially improve availability and performance; a structural-equation study of pharmaceutical supply chains shows that appropriate inventory management, supported by accurate demand forecasting, is necessary to achieve near-zero stockouts and to withstand demand and supply fluctuations, while Nigerian evidence establishes that inventory practices such as just-in-time, materials requirement planning and strategic supplier partnership exert a positive and significant effect on the operational performance of manufacturing firms. The broader implication is that the frequency of shelf shortages is a controllable outcome rather than an inevitable feature of informal trade.

1.3.6 Replenishment Cycle Velocity: refers to the speed with which the interval between the detection of depleted stock and its physical replacement is executed, capturing the responsiveness dimension of last-mile stockout mitigation. Conceptually, it draws on the logistics-service-quality and supply-chain-agility literatures, which establish that the pace and reliability of the restocking loop are decisive for performance and satisfaction: research in emerging markets demonstrates that logistics service quality facilitates logistics performance, a large-sample study shows that operational, informational and other logistics-service-quality dimensions significantly raise customer satisfaction and re-use intention, and meta-analytic evidence confirms that supply-chain agility, the capacity to respond quickly to demand and supply shifts, is robustly and positively associated with firm and operational performance across regions and industries [16].

1.4 B2B App Procurement and Last-Mile Stockout Mitigation

Oroye et al. investigated the impact of smart supply-chain technologies on the operational efficiency of the fast-moving consumer goods manufacturing industry. The population comprised FMCG companies listed on the Nigerian Exchange, from which a sample of 18 FMCG companies with manufacturing operations in Lagos and Ogun States was drawn using purposive sampling, and the data were analysed using Partial Least Squares-Structural Equation Modelling (PLS-SEM). The findings revealed that 94% of the sampled firms had adopted smart supply chains and that all eleven hypothesised relationships were supported, indicating that intelligent and interconnected supply-chain indicators together with smart technology significantly enhance operational efficiency. Compared with the present study, this work shares the Nigerian FMCG setting and the PLS-SEM methodology and affirms that supply-chain digitization improves operational outcomes, but it concentrates on large, exchange-listed manufacturers and on operational efficiency in the abstract rather than on informal retailers and on last-mile availability outcomes such as stockout frequency and replenishment speed, which is precisely the gap the present study fills. Also, Saryatmo and Sukhotu examined the influence of the digital supply chain on operational performance in the food and beverage industry of Indonesia. Data were gathered through a survey yielding 209 usable responses, which were analysed using PLS-SEM, and the study found that the digital supply chain exerts significant positive effects on operational performance in terms of quality, productivity and cost reduction [17]. The study parallels the present one in linking supply-chain digitization to operational performance within a fast-moving, food-oriented sector and in employing PLS-SEM, yet it was conducted among formal manufacturers in an Asian economy and did not examine the informal retail channel or decompose the outcome into stockout-related dimensions, leaving unaddressed the question of whether comparable effects obtain at the last mile of Nigeria's informal FMCG trade. Furthermore, Lee et al. studied the adoption of smart supply chain and smart technologies to improve operational performance in the manufacturing industry. The population consisted of manufacturing companies in Malaysia, from which a sample of one hundred and nineteen respondents comprising managers and executives was determined and surveyed, and the data were analysed using PLS-SEM. The findings showed that smart supply-chain indicators and smart technology significantly and positively influence operational performance. While the study reinforces the general proposition that digital and smart supply-chain

capabilities improve operational outcomes. Likewise, Musa et al. examined e-procurement adoption in Nigeria from the perspective of public-sector employees. The study drew primary data from 284 procurement and information-technology officials of key federal ministries and agencies, extended the technology acceptance model with perceived trust and perceived security, and analysed the data using PLS-SEM. The findings indicated that perceived usefulness was the strongest predictor of the intention to adopt e-procurement, followed by perceived security and perceived trust, whereas perceived ease of use exerted a significant negative effect [18]. Although the study shares the Nigerian setting and the PLS-SEM approach, it focuses on the antecedents of adoption intention within the public sector rather than on the consequences of procurement digitization for supply availability among informal FMCG retailers, and it does not connect e-procurement to stockout or replenishment outcomes, a gap the present study addresses. In addition, Masudin et al. investigated the impact of e-procurement adoption on company performance in the Indonesian manufacturing industry. The sample comprised sixty procurement managers and decision-makers in medium and large manufacturers in East Java, selected by purposive random sampling, and the data were analysed using PLS-SEM with the aid of SmartPLS and SPSS. The findings established that top-management support and information quality significantly influence e-procurement implementation, which in turn has a significant positive effect on company performance. The study is comparable to the present one in demonstrating that procurement digitization improves organisational performance, but its small, formal-manufacturing sample and its generic performance outcome differ markedly from the informal retail focus and the availability-specific outcomes of the present study, and it does not consider the last-mile context. Still, Lee et al. investigated the factors affecting e-procurement adoption and its effect on supply-chain performance in the Malaysian manufacturing industry [19]. Ninety-nine responses obtained from manufacturers listed in the Federation of Malaysian Manufacturers directory, exceeding the minimum required sample of ninety-two, were analysed using PLS-SEM, and the study found support for thirteen of its hypotheses, confirming that e-procurement adoption significantly supports supply-chain performance, largely through mediated relationships. Based on the forgoing, it it expected that B2B app procurement should be significantly related with both stockout frequency reduction and replenishment cycle velocity of FMCG companies in Rivers State. Accordingly, the following null hypotheses were formulated:

H_{01}: There is no significant relationship between B2B app procurement and stockout frequency reduction of FMCG companies in Rivers State.

H_{02}: There is no significant association between B2B app procurement and replenishment cycle velocity of FMCG companies in Rivers State.

1.5 Real-Time Inventory Tracking and Last-Mile Stockout Mitigation

Lee et al. investigated the impact of the benefits and challenges of Internet-of-Things adoption on supply-chain performance and organisational performance in Malaysia. From a population of three thousand and nineteen manufacturing companies, one thousand one hundred and sixty questionnaires were distributed and sixty-three usable responses were obtained and analysed using PLS-SEM, with six of the seven hypotheses supported. The findings showed that the benefits of Internet-of-Things adoption, notably efficiency and real-time visibility, significantly enhance both supply-chain and organisational performance [20]. The study is pertinent to the present one because real-time visibility is the essence of inventory tracking, yet it was conducted among formal Malaysian manufacturers, treated visibility as a general benefit rather than a retail-level tracking capability, and did not examine stockout or replenishment outcomes in an informal FMCG context. Still, Agyabeng-Mensah et al. explored the role of green logistics management practices, supply-chain traceability and logistics ecocentricity in sustainability performance. Data were collected from two hundred and seventy-four managers of manufacturing firms in Ghana and analysed using PLS-SEM, and the study found that supply-chain traceability, alongside logistics ecocentricity, augments green logistics

practices to achieve significant improvements in business and environmental performance [21]. Because traceability is conceptually adjacent to real-time inventory tracking, the study lends African empirical support to the proposition that visibility improves performance, but its emphasis on sustainability outcomes within formal manufacturing, rather than on last-mile availability within informal retail, distinguishes it from the present study and marks the gap to be bridged. Moreso, Mbah et al. examined the relationship between inventory management and the operational performance of quoted manufacturing firms in south-east Nigeria. Three hundred and seventy-one usable responses, drawn from five hundred and thirty-eight sampled respondents across four quoted manufacturing firms, were analysed using descriptive statistics and regression analysis. The findings established that inventory cost control, just-in-time, materials requirement planning and strategic supplier partnership are each positively and significantly related to operational performance. The study shares the Nigerian setting and demonstrates that disciplined inventory control improves operational outcomes, but it addresses conventional inventory practices in formal manufacturing rather than digitally enabled real-time tracking among informal retailers, and it does not model stockout frequency or replenishment velocity as outcomes, which the present study undertakes [22]. Thus, it is expected that real-time inventory tracking will be significantly related to both stockout frequency reduction and replenishment cycle velocity of FMCG companies in Rivers State. Arising from the foregoing, the following null hypotheses were formulated:

H_{o3}: There is no significant relationship between real-time inventory tracking and stockout frequency reduction of FMCG companies in Rivers State.

H_{o4}: There is no significant association between real-time inventory tracking and replenishment cycle velocity of FMCG companies in Rivers State.

2. Materials and Methods

This study was anchored on a cross-sectional survey research design of the explanatory (correlational) variety. The target population of the study comprised all FMCG companies operating within Rivers State that maintain direct distributorship relationships with established manufacturing brands. These brands include, among others, UACN, NASCON, Nestlé, Unilever, Nigerian Breweries, Coca-Cola, Procter and Gamble (P&G), Reckitt, GSK Consumer, BUA Group, Flour Mills, Dangote Group, 7Up Bottling Company, Guinness and Promasidor. However, the accessible population was delimited to 550 FMCG distributors concentrated within the Port Harcourt City and Obio/Akpor local government areas, which together constitute the commercial nerve-centre of the state's consumer-goods trade. The accessible population was distributed across the principal commercial zones and market clusters of the two local government areas, namely Mile 1 Market, Mile 3 Market, Rumuokoro Market, Elelenwo Market, Trans-Amadi Market and Worji Market, as well as the trading corridors of Rumuomasi, Choba, Rumuosi, Alakahia and Ogbunabali. To ensure that the frame mirrored actual regional consumption patterns rather than an arbitrary spread of outlets, the study concentrated on distributors whose primary product lines reflected the dominant demand structure of the area. Accordingly, distributors dealing chiefly in confectionaries and snacks accounted for the largest share at 48 per cent, followed by dealers in household groceries and staples at 26 per cent, dealers in beverages and liquids at 14 per cent, and dealers in baked goods and alternative products at 12 per cent. This product-type composition ensured that the population reflected the everyday realities of last-mile FMCG distribution in the study area. The sample size of 226 respondents was determined with the aid of the Krejcie and Morgan (1970) table for determining sample size from a given population. A purposive (judgemental) sampling technique was employed in selecting the respondents. Primary data were gathered by means of a structured questionnaire, and all items were scaled on a five-point Likert format. A reliability cut-off point of 0.70 was adopted as the threshold below which a construct would be regarded as insufficiently reliable, in keeping with the conventional benchmark for both Cronbach's alpha and composite reliability. The data

were analysed using the Partial Least Squares Structural Equation Modelling (PLS-SEM) technique, executed with the SmartPLS 4.1.1.9 software. PLS-SEM was adopted because it is robust and flexible in application, accommodates non-normally distributed data and moderately sized samples, and permits the simultaneous estimation of the measurement model and the structural model within a single analytical framework. The measurement (outer) model was evaluated to establish the reliability and validity of the reflective indicators, while the structural (inner) model was evaluated to test the hypothesised relationships among the latent constructs. Bootstrapping was employed to generate the t-statistics and p-values upon which inference rested. All the hypotheses were tested at the 0.05 level of significance. In line with the decision rule for a two-tailed test, a path was adjudged statistically significant where the t-value exceeded 1.96 and the corresponding p-value was less than 0.05; conversely, a path was treated as non-significant where the t-value fell below 1.96 and the p-value exceeded 0.05.

3. Results and Discussion

Of the 226 copies of the structured questionnaire administered to the sampled FMCG distributors, 210 copies were retrieved, representing a retrieval rate of 92.92 per cent. On careful screening of the returned instruments, 8 copies (3.54 per cent) were found to be defective on account of incomplete entries, multiple ticking or other inconsistencies, and were accordingly discarded. This left 202 copies (89.38 per cent) that were adequately completed, valid and usable for the analysis. The response rate is summarised in Table 1 and depicted graphically in Figure 4.1.

Table 1. Questionnaire Response Rate

Questionnaire	Frequency	Percentage (%)
Number Administered	226	100.00
Number Retrieved	210	92.92
Number of Defective Responses	8	3.54
Number Used	202	89.38

Source: Field Survey, 2026.

As shown in Table 1, the valid response rate of 89.38 per cent is well above the minimum thresholds ordinarily regarded as adequate for questionnaire-based social science research, and it comfortably satisfies the sample-size requirements for stable estimation in PLS-SEM [23]. The high proportion of usable returns lends credibility to the subsequent analysis and reduces concerns about non-response bias, since the overwhelming majority of the targeted distributors participated meaningfully in the study. The 202 usable responses therefore constituted the effective sample (N = 202) on which all subsequent descriptive and inferential analyses were based.

3.1 Descriptive Statistics

This subsection presents the descriptive statistics for the six items measuring each of the study's four proxies. In interpreting the item means, a criterion (cut-off) mean of 3.00 was adopted, being the mid-point of the five-point Likert scale. Item means at or above 3.00 indicate agreement with the statement, whereas means below 3.00 indicate disagreement [24]. The standard deviation, in turn, conveys the degree of dispersion or consensus in the responses, with smaller values reflecting greater agreement among the distributors and larger values reflecting wider divergence of opinion.

Table 2. Descriptive Statistics for B2B App Procurement

S/N	Questionnaire Item	N	Min.	Max.	Mean	Std. Dev.
1	I place orders for FMCG stock directly through a business-to-business (B2B) mobile application or platform.	202	1.0	5.0	4.11	1.187

S/N	Questionnaire Item	N	Min.	Max.	Mean	Std. Dev.
2	The B2B procurement application makes it easy to compare prices and select suppliers.	202	1.0	5.0	4.00	1.330
3	Ordering through the B2B application reduces the time and cost I spend restocking.	202	1.0	5.0	4.04	1.255
4	The B2B application improves transparency in my dealings with suppliers and distributors.	202	1.0	5.0	3.97	1.339
5	The B2B procurement platform integrates my orders directly with the supplier's fulfilment system.	202	1.0	5.0	3.85	1.156
6	I find the B2B procurement application useful for keeping my shop adequately stocked.	202	1.0	5.0	3.80	1.223

Source: SPSS Survey Data, 2026.

Table 2 reveals that all six items measuring **B2B app procurement** returned means well above the 3.00 criterion, ranging from 3.80 to 4.11 and yielding a construct grand mean of approximately 3.96. The highest-rated item was the direct placement of FMCG orders through a business-to-business mobile application (mean = 4.11, SD = 1.187), while the perceived usefulness of the application for keeping the shop adequately stocked recorded the lowest, though still strongly agreed, mean (3.80, SD = 1.223). The ease of comparing prices and selecting suppliers (4.00) and the reduction of time and cost spent restocking (4.04) were likewise strongly endorsed [25]. Standard deviations clustered between 1.156 and 1.339, indicating moderate and fairly consistent dispersion. Taken together, the pattern shows that the sampled distributors overwhelmingly embrace B2B application procurement as an established feature of their restocking practice.

Table 3. Descriptive Statistics for Real-Time Inventory Tracking

S/N	Questionnaire Item	N	Min.	Max.	Mean	Std. Dev.
1	I can monitor my current stock levels in real time using a digital tool or application.	202	1.0	5.0	3.82	1.347
2	The tracking system alerts me promptly when a product is running low.	202	1.0	5.0	3.70	1.390
3	Real-time tracking gives me accurate visibility of what is selling and what is depleting.	202	1.0	5.0	3.80	1.223
4	The inventory tracking system helps me detect shortages before the shelf becomes empty.	202	1.0	5.0	3.73	1.227
5	Suppliers can view my stock position and anticipate my replenishment needs.	202	1.0	5.0	3.84	1.203
6	Real-time inventory information improves the accuracy of my restocking decisions.	202	1.0	5.0	3.99	1.373

Source: SPSS Survey Data, 2026.

As presented in Table 3, the six items measuring **real-time inventory tracking** produced means ranging from 3.70 to 3.99, giving a construct grand mean of about 3.81, which lies comfortably above the 3.00 threshold. Respondents agreed most strongly that real-time inventory information improves the accuracy of their restocking decisions (mean = 3.99, SD = 1.373) and that suppliers can view their stock position and anticipate replenishment needs (3.84, SD = 1.203). The lowest, yet still affirmative, rating attached to the promptness of low-stock alerts (3.70, SD = 1.390). The standard deviations, which ranged from 1.203 to 1.390, point to moderate variability in perception, suggesting that while the technology is broadly valued, the reliability of its alerting features is experienced somewhat unevenly across outlets [26]. On the whole, the distributors affirm that real-time tracking enhances the visibility and accuracy of their inventory management.

Table 4. Descriptive Statistics for Stockout Frequency Reduction

S/N	Questionnaire Item	N	Min.	Max.	Mean	Std. Dev.
1	The number of times demanded products are out of stock in my shop has reduced.	202	1.0	5.0	3.73	1.327
2	Customers rarely leave my shop because a product they wanted was unavailable.	202	1.0	5.0	3.90	1.236
3	Fast-moving items are consistently available on my shelves.	202	1.0	5.0	3.86	1.195
4	Instances of lost sales due to stockouts have declined.	202	1.0	5.0	3.84	1.159
5	I am able to meet customer demand for products without frequent shortages.	202	1.0	5.0	3.90	1.194
6	The reliability of product availability in my shop has improved.	202	1.0	5.0	3.72	1.368

Source: SPSS Survey Data, 2026.

Table 4 shows that the six items measuring **stockout frequency reduction** returned means between 3.72 and 3.90, with a construct grand mean of roughly 3.83, confirming general agreement across the board. Respondents agreed most strongly that customers rarely leave their shops because a wanted product is unavailable (mean = 3.90, SD = 1.236) and that they are able to meet customer demand without frequent shortages (3.90, SD = 1.194). The consistent availability of fast-moving items (3.86) and the decline in lost sales attributable to stockouts (3.84) were similarly endorsed, while the improved reliability of product availability recorded the lowest but still positive mean (3.72, SD = 1.368) [27]. With standard deviations ranging from 1.159 to 1.368, the responses reflect moderate dispersion. The evidence indicates that, in the perception of the distributors, the incidence of stockouts in their outlets has meaningfully diminished.

Table 5. Descriptive Statistics for Replenishment Cycle Velocity

S/N	Questionnaire Item	N	Min.	Max.	Mean	Std. Dev.
1	Depleted stock in my shop is replaced quickly.	202	1.0	5.0	2.92	1.591
2	The time between placing an order and receiving delivery has shortened.	202	1.0	5.0	3.77	1.368
3	My suppliers respond rapidly when I need to restock.	202	1.0	5.0	3.85	1.124
4	Restocking now happens with minimal delay after stock runs low.	202	1.0	5.0	3.72	1.368

S/N	Questionnaire Item	N	Min.	Max.	Mean	Std. Dev.
5	The speed of replenishment enables me to keep pace with customer demand.	202	1.0	5.0	3.75	1.017
6	The overall responsiveness of my restocking process has improved.	202	1.0	5.0	3.80	1.223

Source: SPSS Survey Data, 2026.

Table 5 presents the descriptive statistics for **replenishment cycle velocity**. Five of the six items recorded means above the 3.00 criterion, ranging from 3.72 to 3.85, while one item fell below it. The most strongly endorsed item was the rapid response of suppliers when restocking is required (mean = 3.85, SD = 1.124), closely followed by the improved overall responsiveness of the restocking process (3.80, SD = 1.223) and the shortening of the interval between order placement and delivery (3.77, SD = 1.368). Notably, however, the item stating that depleted stock in the shop is replaced quickly returned the lowest mean of 2.92, which lies marginally below the 3.00 cut-off and carried the highest dispersion in the entire dataset (SD = 1.591) [28]. This singular result suggests that, notwithstanding broad improvements in supplier responsiveness and delivery lead-times, a sizeable segment of distributors still experiences delays in the physical replacement of depleted stock, and their opinions on this particular dimension are sharply divided. The construct nonetheless returned an overall grand mean of approximately 3.64, indicating that, on balance, the velocity of the replenishment cycle is perceived to have improved.

3.2 Measurement Model Evaluation

Prior to the estimation of the structural paths and the testing of the study hypotheses, the reflective measurement model was rigorously evaluated in order to establish the reliability and validity of the constructs and their indicators, in line with the assessment procedure recommended for variance-based structural equation modelling [29]. Consistent with the analytical protocol adopted for this study, four criteria were examined at the first-order level, namely indicator reliability, internal consistency reliability, convergent validity, and discriminant validity. Indicator reliability was assessed through the standardised outer loadings, for which Hulland recommends a threshold of 0.70, and through the squared loadings (β^2), for which an indicator reliability value of at least 0.50 indicates that the construct explains more than half of the variance in the indicator. Internal consistency reliability was assessed using Cronbach's alpha and composite reliability, each of which was required to attain a minimum value of 0.70 (Nunnally & Bernstein, 1994; Hair et al., 2011), while convergent validity was assessed using the average variance extracted (AVE), for which a value of at least 0.50 is required [30]. Discriminant validity was established through both the Fornell–Larcker criterion and the heterotrait–monotrait (HTMT) ratio of correlations. The measurement model, showing the retained indicators, their standardised outer loadings, and the second-order loadings of the dimensions on their respective higher-order constructs, is presented in Figure 2.

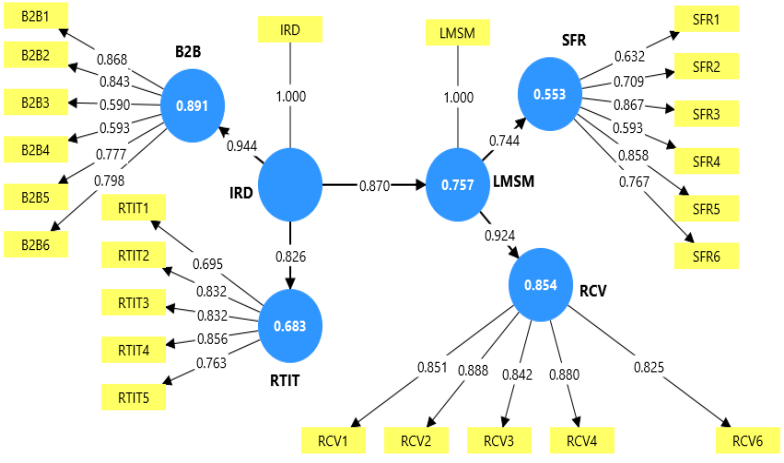

Figure 2. Measurement (Outer) Model. Source: SmartPLS Output of Research Data, 2026.

Where: IRD = Informal Retail Digitization; LMSM = Last-Mile Stockout Mitigation; B2B = B2B App Procurement; RTIT = Real-Time Inventory Tracking; RCV = Replenishment Cycle Velocity; SFR = Stockout Frequency Reduction.

Source: SmartPLS 4.1.1.7

3.3 Result for the Reflective Measurement Model

As presented in Figure 2 and Table 6, the reflective measurement model was assessed for indicator reliability, internal consistency reliability, and convergent validity across the four first-order constructs using SmartPLS. For B2B App Procurement, all six indicators were retained, with standardised outer loadings ranging from 0.590 (B2B3) to 0.868 (B2B1); although B2B3 (0.590) and B2B4 (0.593) fell below the 0.70 loading benchmark and returned indicator reliability values of 0.348 and 0.352 respectively, they were retained because their deletion did not raise the average variance extracted or the composite reliability above the levels already attained, in keeping with the guidance that indicators with loadings between 0.40 and 0.70 should be retained where the construct-level validity indices are satisfied (Hair et al., 2014). The construct returned a Cronbach's alpha of 0.845, a rho_a of 0.876, a composite reliability (rho_c) of 0.885, and an AVE of 0.567, thereby confirming adequate internal consistency reliability and convergent validity [31]. For Real-Time Inventory Tracking, the five retained indicators posted loadings between 0.695 (RTIT1) and 0.856 (RTIT4); RTIT1 fell only marginally below the 0.70 threshold with an indicator reliability of 0.483 but was retained on the same basis, and the construct recorded a Cronbach's alpha of 0.856, a rho_a of 0.868, a composite reliability of 0.897, and an AVE of 0.636, indicating strong reliability and convergent validity. For Replenishment Cycle Velocity, RCV5 was deleted during the purification of the measurement model, and the five retained indicators (RCV1, RCV2, RCV3, RCV4, and RCV6) posted uniformly strong loadings ranging from 0.825 (RCV6) to 0.888 (RCV2), all comfortably exceeding the 0.70 threshold, with indicator reliability values between 0.681 and 0.788; this construct exhibited the strongest psychometric profile in the study, with a Cronbach's alpha of 0.910, a rho_a of 0.913, a composite reliability of 0.933, and an AVE of 0.736. For Stockout Frequency Reduction, all six indicators were retained, with loadings ranging from 0.593 (SFR4) to 0.867 (SFR3); SFR1 (0.632) and SFR4 (0.593) fell below the 0.70 benchmark, with indicator reliability values of 0.399 and 0.352 respectively, yet were retained because the construct's AVE of 0.555 and composite reliability of 0.880 remained above their respective thresholds, while a Cronbach's alpha of 0.858 and a rho_a of 0.940 further confirmed acceptable internal consistency reliability [32]. Taken together, the four first-order constructs each satisfied the reliability and convergent validity thresholds, with all composite reliability values falling within the 0.885–0.933 range, all Cronbach's alpha values within the 0.845–0.910 range, and all AVE values (0.555–0.736) exceeding the 0.50 minimum, thereby confirming that the retained indicators reliably and validly represented their respective latent constructs and that the measurement model was psychometrically sound.

Table 6. Result Summary for the Reflective Measurement Model

Construct	Indicator	Loading (β)	Indicator Reliability (β^2)	Cronbach's α	rho_a	CR (rho_c)	AVE
Thresholds		*>0.70*	*>0.50*	*≥0.70*	*≥0.70*	*≥0.70*	*≥0.50*
B2B App Procurement (B2B)	B2B1	0.868	0.753	0.845	0.876	0.885	0.567
	B2B2	0.843	0.711				
	B2B3	0.590	0.348				
	B2B4	0.593	0.352				

Construct	Indicator	Loading (β)	Indicator Reliability (β^2)	Cronbach's α	rho_a	CR (rho_c)	AVE
	B2B5	0.777	0.604				
	B2B6	0.798	0.637				
Real-Time Inventory Tracking (RTIT)	RTIT1	0.695	0.483	0.856	0.868	0.897	0.636
	RTIT2	0.832	0.692				
	RTIT3	0.832	0.692				
	RTIT4	0.856	0.733				
	RTIT5	0.763	0.582				
Replenishment Cycle Velocity (RCV)	RCV1	0.851	0.724	0.910	0.913	0.933	0.736
	RCV2	0.888	0.788				
	RCV3	0.842	0.709				
	RCV4	0.880	0.774				
	RCV6	0.825	0.681				
Stockout Frequency Reduction (SFR)	SFR1	0.632	0.399	0.858	0.940	0.880	0.555
	SFR2	0.709	0.503				
	SFR3	0.867	0.752				
	SFR4	0.593	0.352				
	SFR5	0.858	0.736				
	SFR6	0.767	0.588				

Source: SmartPLS Output of Research Data, 2026.

3.4 Discriminant Validity (Fornell–Larcker Criterion)

Discriminant validity was first assessed using the Fornell–Larcker criterion, which requires that the square root of each construct's average variance extracted, represented by the diagonal values in the matrix, should exceed the construct's correlations with every other construct in the model, thereby confirming that each construct shares more variance with its own indicators than with any other construct. As presented in Table 7, the square root of the AVE for B2B App Procurement was 0.793, which exceeded its correlations with Replenishment Cycle Velocity (0.786), Real-Time Inventory Tracking (0.736), and Stockout Frequency Reduction (0.719); the square root of the AVE for Replenishment Cycle Velocity was 0.858, surpassing its correlations with B2B App Procurement (0.786), Real-Time Inventory Tracking (0.614), and Stockout Frequency Reduction (0.683); the diagonal value for Real-Time Inventory Tracking was 0.798, which exceeded its correlations with B2B App Procurement (0.736), Replenishment Cycle Velocity (0.614), and Stockout Frequency Reduction (0.674); and the square root of the AVE for Stockout Frequency Reduction was 0.745, which was greater than its correlations with B2B App Procurement (0.719), Replenishment Cycle Velocity (0.683), and Real-Time Inventory Tracking (0.674). Although the correlation between B2B App Procurement and Replenishment Cycle Velocity (0.786) approached the corresponding diagonal value of 0.793, it remained below

it; consequently, all four constructs satisfied the Fornell–Larcker criterion, establishing adequate discriminant validity and confirming that each latent variable was empirically distinct from the others [33].

Table 7. Discriminant Validity of the Constructs (Fornell–Larcker Criterion)

	B2B	RCV	RTIT	SFR
B2B	**0.793**			
RCV	0.786	**0.858**		
RTIT	0.736	0.614	**0.798**	
SFR	0.719	0.683	0.674	**0.745**

Source: SmartPLS Output of Research Data, 2026. Diagonal (bold) values are the square roots of the AVE; off-diagonal values are inter-construct correlations.

3.5 Discriminant Validity (Heterotrait–Monotrait Ratio of Correlations)

In view of the acknowledged limitations of the Fornell–Larcker criterion in detecting discriminant validity problems, the heterotrait–monotrait (HTMT) ratio of correlations was employed as a more sensitive and rigorous confirmatory test, with values below the conservative threshold of 0.85 (and the more liberal threshold of 0.90) indicating adequate discriminant validity. As shown in Table 8, all the HTMT values computed among the four first-order constructs fell below the conservative 0.85 threshold: the ratio between Real-Time Inventory Tracking and B2B App Procurement was the highest at 0.845, followed by that between Replenishment Cycle Velocity and Stockout Frequency Reduction (0.738), between B2B App Procurement and Stockout Frequency Reduction (0.689), between Real-Time Inventory Tracking and Replenishment Cycle Velocity (0.684), between B2B App Procurement and Replenishment Cycle Velocity (0.665), and between Real-Time Inventory Tracking and Stockout Frequency Reduction (0.651). At the higher-order level, the HTMT ratio between Informal Retail Digitization and Last-Mile Stockout Mitigation was 0.824, which likewise remained below the 0.85 conservative threshold, confirming that the two higher-order constructs were empirically distinct from each other. Collectively, since all HTMT ratios were below the 0.85 threshold, the results provided robust confirmation of discriminant validity, complementing the evidence obtained from the Fornell–Larcker criterion and affirming the overall integrity of the measurement model.

Table 8. Discriminant Validity of the Constructs (Heterotrait–Monotrait Ratio)

	B2B	IRD	LMSM	RCV	RTIT	SFR
B2B						
IRD	0.499					
LMSM	0.830	0.824				
RCV	0.665	0.784	0.566			
RTIT	0.845	0.787	0.682	0.684		
SFR	0.689	0.706	0.662	0.738	0.651	

Source: SmartPLS Output of Research Data, 2026. Where: B2B = B2B App Procurement; IRD = Informal Retail Digitization; LMSM = Last-Mile Stockout Mitigation; RCV = Replenishment Cycle Velocity; RTIT = Real-Time Inventory Tracking; SFR = Stockout Frequency Reduction.

3.6 Assessment of the Higher-Order Constructs

Following confirmation of the psychometric adequacy of the four first-order constructs, the higher-order measurement structure was assessed in the second stage using the latent variable scores of the dimensions. The reflective relationships between each higher-order construct and its dimensions were strong and substantial: Informal Retail Digitization explained 89.1% of the variance in B2B App Procurement ($R^2 = 0.891$) and 68.3% of the variance in Real-Time Inventory Tracking ($R^2 = 0.683$), corresponding to second-order loadings of 0.944 and 0.826 respectively, while Last-Mile Stockout Mitigation

explained 85.4% of the variance in Replenishment Cycle Velocity ($R^2 = 0.854$) and 55.3% of the variance in Stockout Frequency Reduction ($R^2 = 0.553$), corresponding to second-order loadings of 0.924 and 0.744 respectively. The effect sizes associated with these relationships were correspondingly large, with f^2 values of 8.142 and 2.154 for the two dimensions of Informal Retail Digitization and 5.844 and 1.237 for the two dimensions of Last-Mile Stockout Mitigation, all far exceeding the 0.35 benchmark for a large effect. These results confirmed that each dimension loaded strongly and meaningfully onto its designated higher-order construct, thereby validating the higher-order reflective specification and affirming that the measurement model, having satisfied all indicator reliability, internal consistency reliability, convergent validity, and discriminant validity requirements, was fit for the subsequent structural model assessment and hypothesis testing.

3.7 Assessment of Predictive Accuracy, Predictive Relevance and Effect Size

The explanatory and predictive quality of the structural model was evaluated through the coefficient of determination (R^2), the effect size (f^2), and the predictive relevance (Q^2), in accordance with the thresholds established by Hair et al. The coefficient of determination expresses the proportion of variance in an endogenous latent variable that is jointly accounted for by the constructs to which it is linked, and values of 0.75, 0.50, and 0.25 respectively denote substantial, moderate, and weak levels of predictive accuracy. As reported in Table 9 and depicted in Figures 3 and 4, the two proxies of Last-Mile Stockout Mitigation recorded substantial-to-moderate predictive accuracy: Replenishment Cycle Velocity returned an R^2 of 0.854 (adjusted $R^2 = 0.852$), indicating that the model accounted for approximately 85.4% of the variance in replenishment cycle velocity, which represents a substantial level of predictive accuracy; while Stockout Frequency Reduction returned an R^2 of 0.553 (adjusted $R^2 = 0.548$), indicating that approximately 55.3% of the variance in stockout frequency reduction was explained, representing a moderate level of predictive accuracy. Within the higher-order reflective specification of Informal Retail Digitization, the model further accounted for 89.1% of the variance in B2B App Procurement ($R^2 = 0.891$; adjusted $R^2 = 0.889$) and 68.3% of the variance in Real-Time Inventory Tracking ($R^2 = 0.683$; adjusted $R^2 = 0.680$), reflecting substantial and moderate predictive accuracy respectively and confirming that both proxies were strongly represented by their higher-order construct. The effect size (f^2) quantifies the change in the R^2 of an endogenous construct when a specified exogenous construct is omitted from the model; Hair et al. classify f^2 values of 0.02, 0.15, and 0.35 as small, medium, and large effects respectively. The results revealed uniformly large effect sizes across the reflective higher-order relationships: Informal Retail Digitization exerted effect sizes of 8.142 and 2.154 on B2B App Procurement and Real-Time Inventory Tracking respectively, while Last-Mile Stockout Mitigation exerted effect sizes of 5.844 and 1.237 on Replenishment Cycle Velocity and Stockout Frequency Reduction respectively; all four values substantially exceed the 0.35 benchmark for a large effect, confirming that each higher-order construct contributed very strongly to the explained variance of its constituent proxies.

Table 9. Predictive Accuracy (R^2) and Effect Size (f^2)

Construct	R^2	Adj. R^2	Predictive Accuracy	f^2	Effect Size
B2B App Procurement (B2B)	0.891	0.889	Substantial	8.142	Large
Real-Time Inventory Tracking (RTIT)	0.683	0.680	Moderate	2.154	Large
Replenishment Cycle Velocity (RCV)	0.854	0.852	Substantial	5.844	Large
Stockout Frequency Reduction (SFR)	0.553	0.548	Moderate	1.237	Large

Source: SmartPLS Output of Research Data, 2026. f^2 values represent the effect of each higher-order construct (IRD, LMSM) on its respective proxy.

3.8 Test of Hypotheses

The four hypothesised relationships were tested at the 0.05 level of significance using the bootstrapping routine in SmartPLS. Following Cohen, standardised path coefficients (β) between 0.10 and 0.29 denote weak correlations, those between 0.30 and 0.49 denote moderate correlations, and those between 0.50 and 1.00 denote strong correlations; and following Hair et al. for a two-tailed test a relationship is significant where the t-value exceeds 1.96 and the p-value is below 0.05, and non-significant otherwise. The path coefficients, standard deviations, t-statistics, p-values, and the resulting decisions on the null hypotheses are summarised in Table 10, while the structural model is depicted with p-values in Figure 3 and with t-values in Figure 4.

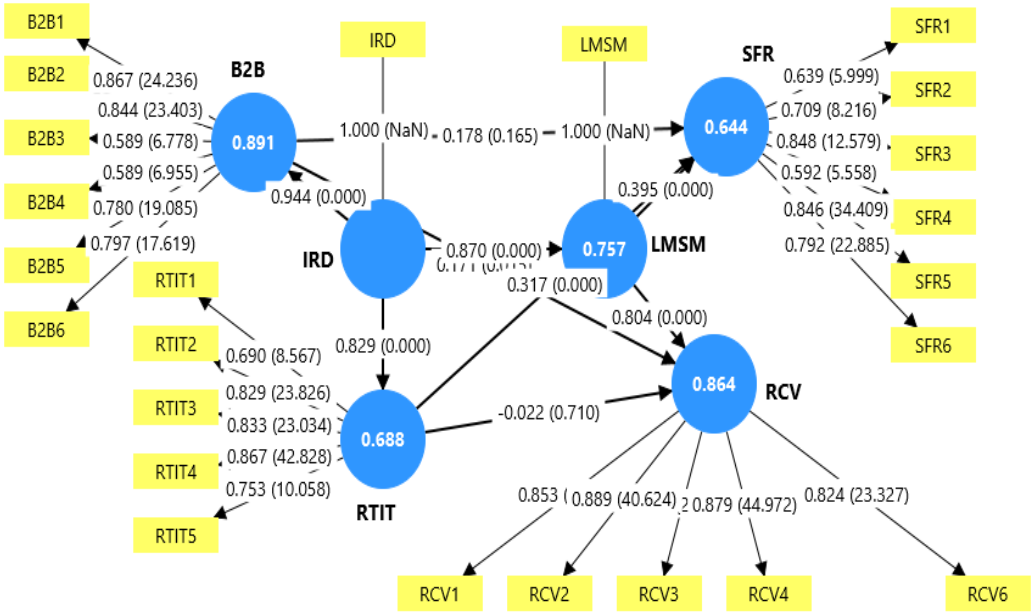

Figure 3. Structural Model with Path Coefficients (β) and P-values.

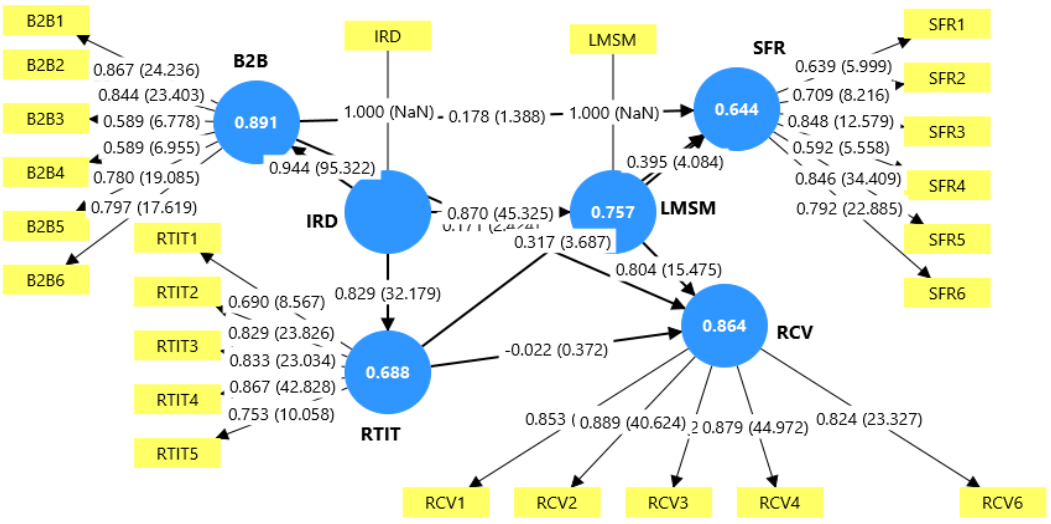

Figure 4. Structural Model with Path Coefficients (β) and T-values. Source: SmartPLS Output of Research Data, 2026.

Source: SmartPLS Output of Research Data, 2026. B2B and RTIT are proxies of Informal Retail Digitization (IRD); RCV and SFR are proxies of Last-Mile Stockout Mitigation (LMSM).

Table 10. Summary of Hypotheses Testing (Path Coefficients, T-statistics and P-values)

Hyp.	Path	β	STDEV	t-value	p-value	Decision on Null
Ho1	B2B → SFR	0.178	0.129	1.388	0.165	Supported (not significant)
Ho2	B2B → RCV	0.171	0.071	2.424	0.015	Rejected (significant)
Ho3	RTIT → SFR	0.317	0.086	3.687	0.000	Rejected (significant)
Ho4	RTIT → RCV	-0.022	0.060	0.372	0.710	Supported (not significant)

Source: SmartPLS Output of Research Data, 2026. B2B = B2B App Procurement; RTIT = Real-Time Inventory Tracking; RCV = Replenishment Cycle Velocity; SFR = Stockout Frequency Reduction.

3.9 Interpretation of Results

The first hypothesis (Ho1) stated that there is no significant relationship between B2B App Procurement and Stockout Frequency Reduction of FMCG companies in Rivers State. The finding revealed that B2B App Procurement has a weak, positive and non-significant relationship with Stockout Frequency Reduction, and the null hypothesis is therefore supported. The PLS-SEM results returned a path coefficient (β) of 0.178, a t-value of 1.388, and a p-value of 0.165. Given that the t-value fell below the 1.96 threshold and the p-value exceeded 0.05, the relationship is statistically non-significant, and by Cohen's (1988) benchmark, the coefficient of 0.178 denotes a weak correlation.

The second hypothesis (Ho2) stated that there is no significant association between B2B App Procurement and Replenishment Cycle Velocity of FMCG companies in Rivers State. The finding revealed that B2B App Procurement has a weak, positive, and significant relationship with Replenishment Cycle Velocity, and the null hypothesis is accordingly rejected. The PLS-SEM output returned a path coefficient (β) of 0.171, a t-value of 2.424, and a p-value of 0.015; since the t-value exceeded 1.96 and the p-value was below 0.05, the relationship is statistically significant, while the magnitude of 0.171 denotes a weak correlation in Cohen's (1988) terms.

The third hypothesis (Ho3) stated that there is no significant relationship between Real-Time Inventory Tracking and Stockout Frequency Reduction of FMCG companies in Rivers State. The finding revealed that Real-Time Inventory Tracking has a moderate, positive, and significant relationship with Stockout Frequency Reduction, and the null hypothesis is therefore rejected. The PLS-SEM results returned a path coefficient (β) of 0.317, a t-value of 3.687, and a p-value of 0.000; as the t-value substantially exceeded 1.96 and the p-value fell below 0.05, the relationship is statistically significant, and the coefficient of 0.317 denotes a moderate correlation per Cohen, making this the strongest of the four hypothesised paths.

The fourth hypothesis (Ho4) stated that there is no significant association between Real-Time Inventory Tracking and Replenishment Cycle Velocity of FMCG companies in Rivers State. The finding revealed that Real-Time Inventory Tracking has a negligible, negative, and non-significant relationship with Replenishment Cycle Velocity, and the null hypothesis is therefore accepted (not rejected). The PLS-SEM results returned a path coefficient (β) of -0.022, a t-value of 0.372, and a p-value of 0.710; because the t-value was far below 1.96 and the p-value greatly exceeded 0.05, the relationship is statistically non-significant, and the coefficient of -0.022, lying below the 0.10 lower bound of Cohen's weak band, denotes a negligible and essentially null association whose negative sign is not substantively interpretable given its non-significance.

4. Discussion

4.1 B2B App Procurement and Stockout Frequency Reduction

The finding revealed that B2B App Procurement has a weak, positive and non-significant relationship with Stockout Frequency Reduction of FMCG companies in Rivers State. The result diverges from previous studies who found that e-procurement implementation significantly improved company performance. The divergence is nonetheless reconcilable with Musa et al. who found that perceived ease of use exerted a significant negative effect on e-procurement adoption, demonstrating that procurement-digitization effects are strongly context-dependent rather than automatic. The implication of this finding is that, within the informal FMCG retail setting of Rivers State, the mere adoption of B2B ordering applications for procurement may not, on its own, translate into a statistically discernible reduction in the frequency of stockouts at the last mile. This finding was surprising, because it runs counter to the a priori expectation, which anticipated that B2B app procurement would bear a significant positive relationship with last-mile stockout mitigation. Theoretically, the non-significant result offers a nuanced test of the study's frameworks: under the Expectancy Disconfirmation Theory. It indicates that informal retailers' expectation that app-based procurement would curb stockouts was not confirmed in practice, producing a neutral-to-negative disconfirmation on that specific outcome; and under the General Systems Theory, it signals weak coupling between the procurement subsystem and the availability subsystem, implying that the digital input is not, by itself, sufficiently transmitted through the distribution system to alter stockout outcomes.

4.2 B2B App Procurement and Replenishment Cycle Velocity

The study found that there is no significant association between B2B App Procurement and Replenishment Cycle Velocity of FMCG companies in Rivers State. This finding agrees with previous studies, which established that procurement digitization significantly enhances organisational and supply-chain performance. The implication is that FMCG firms achieve measurably faster replenishment cycles, because digital ordering compresses the order-to-delivery interval by removing the manual, telephone-based, or agent-mediated frictions of traditional ordering, thereby enabling instantaneous order transmission, automated order confirmation, and tighter buyer–supplier synchronisation. This finding was expected and is consistent with the a priori expectation. Theoretically, the finding supports the Expectancy Disconfirmation Theory which states and validates the General Systems Theory, demonstrating strong coupling between the procurement subsystem (input) and the replenishment-velocity subsystem (output) within the FMCG distribution system.

4.3 Real-Time Inventory Tracking and Stockout Frequency Reduction

The finding revealed that Real-Time Inventory Tracking has a moderate, positive, and significant relationship with Stockout Frequency Reduction of FMCG companies in Rivers State. This finding agrees with previous studies who found that the benefits of Internet-of-Things adoption, notably efficiency and real-time visibility, significantly enhanced supply-chain and organisational performance. The implication is that FMCG firms and retailers that deploy real-time inventory tracking achieve a substantial and reliable reduction in the frequency of stockouts. This finding was expected and accords fully with the a priori expectation. Theoretically, the finding supports the study's frameworks: under the Expectancy Disconfirmation Theory, retailers' expectation that real-time tracking would reduce stockouts was strongly confirmed, yielding positive disconfirmation and satisfaction with the technology; and under the General Systems Theory, it demonstrates tight coupling and effective feedback between the information subsystem (real-time tracking) and the availability subsystem (stockout reduction), exemplifying the systemic principle that timely information feedback regulates system outputs and moves the system toward the dynamic equilibrium of continuous availability.

4.4 Real-Time Inventory Tracking and Replenishment Cycle Velocity

The finding revealed that Real-Time Inventory Tracking has a negligible, negative, and non-significant relationship with Replenishment Cycle Velocity of FMCG companies in Rivers State. This finding stands in tension with Lee et al. and Agyabeng-Mensah et al. who associated real-time visibility and traceability with improved supply-chain performance, and with Pasupuleti et al. who linked real-time data to optimised replenishment. The implication is that, in the Rivers State FMCG context, the presence of real-time inventory tracking does not, by itself, accelerate the replenishment cycle. This finding was surprising, since it departs from the a priori expectation, which anticipated a significant positive relationship. Theoretically, the result qualifies the study's frameworks: under the Expectancy Disconfirmation Theory, retailers' expectation that tracking would hasten replenishment was disconfirmed, indicating that the technology did not meet expectations on this particular outcome; and under the General Systems Theory, it reflects the principle of equifinality and weak subsystem coupling.

4.5 Contributions to Knowledge

i. The study advances a functional-specialisation insight into the digitization–performance relationship by demonstrating empirically that procurement digitisation and real-time tracking operate through separate, non-substitutable pathways, with the former driving replenishment velocity and the latter driving stockout reduction; this refines the prevailing and often undifferentiated assumption in the reviewed literature that digital adoption yields uniform improvements across all supply chain outcomes, and helps reconcile the digital-optimism and infrastructural-pessimism strands of the conceptual review.

ii. The study extends the joint application of the Expectancy Disconfirmation Theory and the General Systems Theory to informal retail digitization in a developing economy, showing that the confirmation or disconfirmation of retailers' performance expectations, together with the strength of coupling between digital-input subsystems and last-mile output subsystems, jointly explains why particular digital capabilities influence particular last-mile outcomes while leaving others unaffected.

4.6 Suggestions for Further Research

1. Future research should investigate the mediating and moderating variables that may account for the non-significant cross-relationships observed in this study, in particular the relationships between B2B app procurement and stockout frequency reduction and between real-time inventory tracking and replenishment cycle velocity. Constructs such as logistics and delivery capability, demand-forecasting accuracy, retailer digital literacy, working-capital availability, and the quality of network and road infrastructure, should be tested as mediators or moderators.
2. Given that the present study adopted a cross-sectional survey design confined to FMCG companies in Rivers State, future research should replicate the model using a longitudinal design and a broader multi-state or multi-country sample, so as to establish temporal causality, capture the effects of maturing digital adoption over successive replenishment cycles, and enhance the generalisability of the findings across the wider Nigerian and African informal retail landscape.

5. Conclusion

The study concludes that the two digital capabilities operate through distinct and largely non-overlapping pathways: procurement digitisation governs the speed of the replenishment cycle, while real-time tracking governs the availability of stock, and neither capability substitutes for the other. This partial confirmation of the expectations qualifies the prevailing digital-optimism narrative and indicates that FMCG firms seeking comprehensive last-mile stockout mitigation in the informal retail channel must deploy both capabilities in a deliberately integrated manner, rather than assuming that any single digital tool will deliver improvements across all last-mile outcomes.

Based on the findings of the study, the following recommendations were preferred:

The management and channel-development teams of FMCG manufacturers and distributors operating in Rivers State should scale up and institutionalise B2B ordering applications across their informal retail networks, in order to accelerate replenishment cycles and shorten the order-to-delivery interval. This should be achieved by onboarding and training informal retailers on the use of the ordering application, integrating the application directly with the distributor's order-management and enterprise systems so that orders flow automatically to fulfilment, and introducing modest incentives such as loyalty points or priority delivery to entrench digital ordering as the default procurement channel.

The supply chain and information-technology leadership of FMCG companies should invest in and deploy real-time inventory tracking systems across the last-mile network, in order to substantially reduce the frequency of stockouts and safeguard product availability. This should be accomplished by equipping warehouses and, where feasible, retail outlets with barcode, radio-frequency identification, or low-cost mobile stock-monitoring tools, configuring automated low-stock alerts and reorder-point triggers, and providing managers with visibility dashboards that convert continuous stock data into timely replenishment decisions. Emanating from the non-significant relationship between B2B App Procurement and Stockout Frequency Reduction, the operations managers of FMCG firms should refrain from treating procurement digitisation as a stand-alone remedy for stockouts, and should instead integrate the B2B procurement platform with demand-sensing and inventory-visibility capabilities, in order to convert digital ordering into measurable availability gains. This should be done by linking app-based order data with real-time stock data and demand-forecasting analytics, so that ordering decisions are informed by actual consumption and remaining-stock signals, thereby closing the loop between procurement and shelf availability. Based on the non-significant relationship between Real-Time Inventory Tracking and Replenishment Cycle Velocity, the logistics and distribution managers of FMCG companies should ensure that tracking systems are coupled with automated reordering and responsive last-mile logistics, in order to translate stock visibility into faster replenishment. This should be achieved by embedding automatic reorder rules that fire directly from tracking data, negotiating firm delivery service-level agreements with third-party or in-house logistics providers, and optimising delivery routing so that the intelligence generated by tracking is promptly acted upon rather than merely observed.

REFERENCES

[1] Y. Agyabeng-Mensah, E. Afum, I. S. K. Acquah, E. Dacosta, C. Baah, and E. Ahenkorah, "The role of green logistics management practices, supply chain traceability and logistics ecocentricity in sustainability performance," *The International Journal of Logistics Management*, vol. 32, no. 2, pp. 538–566, 2021, doi: 10.1108/IJLM-05-2020-0187.

[2] R. Alfalla-Luque, D. E. Luján García, and J. A. Marin-Garcia, "Supply chain agility and performance: Evidence from a meta-analysis," *International Journal of Operations & Production Management*, vol. 43, no. 10, pp. 1587–1633, 2023, doi: 10.1108/IJOPM-05-2022-0316.

[3] J. Cohen, *Statistical Power Analysis for the Behavioral Sciences*, 2nd ed. Hillsdale, NJ, USA: Lawrence Erlbaum Associates, 1988.

[4] I. Filatotchev, R. D. Ireland, and G. K. Stahl, "Contextualizing management research: An open systems perspective," *Journal of Management Studies*, vol. 59, no. 4, pp. 1036–1056, 2022, doi: 10.1111/joms.12754.

[5] S. George and S. Elrashid, "Inventory management and pharmaceutical supply chain performance of hospital pharmacies in Bahrain: A structural equation modeling approach," *SAGE Open*, vol. 13, no. 1, pp. 1–14, 2023, doi: 10.1177/21582440221149717.

[6] J. F. Hair, G. T. M. Hult, C. M. Ringle, and M. Sarstedt, *A Primer on Partial Least Squares Structural Equation Modeling (PLS-SEM)*. Thousand Oaks, CA, USA: Sage Publications, 2014.

[7] J. F. Hair, M. Sarstedt, L. Hopkins, and V. G. Kuppelwieser, "Partial least squares structural equation modeling (PLS-SEM): An emerging tool in business research," *European Business Review*, vol. 26, no. 2, pp. 106–121, 2014, doi: 10.1108/EBR-10-2013-0128.

[8] J. F. Hair, J. J. Risher, M. Sarstedt, and C. M. Ringle, "When to use and how to report the results of PLS-SEM," *European Business Review*, vol. 31, no. 1, pp. 2–24, 2019, doi: 10.1108/EBR-11-2018-0203.

[9] H.-H. Huang, "Expectation disconfirmation, ideal point and Kano models of customer satisfaction: A comparison," *Journal of Asian Social Science Research*, vol. 5, no. 2, 2024, doi: 10.15575/jassr.v5i2.79.

[10] F. E. Kast and J. E. Rosenzweig, "General systems theory: Applications for organization and management," *Academy of Management Journal*, vol. 15, no. 4, pp. 447–465, 1972, doi: 10.5465/255141.

[11] R. V. Krejcie and D. W. Morgan, "Determining sample size for research activities," *Educational and Psychological Measurement*, vol. 30, no. 3, pp. 607–610, 1970, doi: 10.1177/001316447003000308.

[12] K. L. Lee, A. J. Amin, H. M. Alzoubi, M. Alshurideh, M. E. Khatib, S. Joghee, and K. Nair, "Investigating the factors affecting e-procurement adoption in supply chain performance: An empirical study on Malaysia manufacturing industry," *Uncertain Supply Chain Management*, vol. 12, no. 2, pp. 615–632, 2024, doi: 10.5267/j.uscm.2024.1.021.

[13] K. L. Lee, P. N. Romzi, J. R. Hanaysha, H. M. Alzoubi, and M. Alshurideh, "Investigating the impact of benefits and challenges of IoT adoption on supply chain performance and organizational performance: An empirical study in Malaysia," *Uncertain Supply Chain Management*, vol. 10, no. 2, pp. 537–550, 2022, doi: 10.5267/j.uscm.2021.11.009.

[14] K. L. Lee, S. Y. Wong, H. M. Alzoubi, B. Al Kurdi, M. T. Alshurideh, and M. El Khatib, "Adopting smart supply chain and smart technologies to improve operational performance in manufacturing industry," *International Journal of Engineering Business Management*, vol. 15, pp. 1–14, 2023, doi: 10.1177/18479790231200614.

[15] X. Lin, A. Al Mamun, Q. Yang, and M. Masukujjaman, "Examining the effect of logistics service quality on customer satisfaction and re-use intention," *PLOS ONE*, vol. 18, no. 5, p. e0286382, 2023, doi: 10.1371/journal.pone.0286382.

[16] I. Masudin, G. D. Aprilia, A. Nugraha, and D. P. Restuputri, "Impact of e-procurement adoption on company performance: Evidence from Indonesian manufacturing industry," *Logistics*, vol. 5, no. 1, p. 16, 2021, doi: 10.3390/logistics5010016.

[17] S. Mbah, J. Obiezekwem, and A. Okuoyibo, "Inventory management and operational performance of manufacturing firms in South-East Nigeria," *International Business Research*, vol. 12, no. 7, pp. 76–82, 2019, doi: 10.5539/ibr.v12n7p76.

[18] M. Michalski and J. L. Montes-Botella, "Logistics service quality in an emergent market in Latin America," *The International Journal of Logistics Management*, vol. 33, no. 1, pp. 79–101, 2022, doi: 10.1108/IJLM-11-2020-0433.

[19] N. U. Miko and U. Abbas, "Determinants of efficient last-mile delivery: Evidence from health facilities and Kaduna Health Supplies Management Agency," *Journal of Humanitarian Logistics and Supply Chain Management*, vol. 14, no. 1, pp. 4–16, 2024, doi: 10.1108/JHLSCM-05-2022-0054.

[20] U. Musa, M. Jaafar, and F. M. Raslim, "E-procurement adoption in Nigeria: Perceptions from the public sector employees," *Arab Gulf Journal of Scientific Research*, vol. 42, no. 3, pp. 1130–1149, 2024, doi: 10.1108/AGJSR-10-2022-0224.

[21] R. L. Oliver, "A cognitive model of the antecedents and consequences of satisfaction decisions," *Journal of Marketing Research*, vol. 17, no. 4, pp. 460–469, 1980, doi: 10.1177/002224378001700405.

[22] O. A. Oroye, B. S. Hamzat, and P. F. Sokenu, "Investigating the impact of smart supply chain technologies on operational efficiency of the fast-moving consumer goods manufacturing industry," *Brazilian Journal of Operations & Production Management*, vol. 22, no. 4, p. e20252828, 2025, doi: 10.14488/BJOPM.2828.2025.

[23] V. Pasupuleti, B. Thuraka, C. S. Kodete, and S. Malisetty, "Enhancing supply chain agility and sustainability through machine learning: Optimization techniques for logistics and inventory management," *Logistics*, vol. 8, no. 3, p. 73, 2024, doi: 10.3390/logistics8030073.

[24] A. Rashid and R. Rasheed, "Logistics service quality and product satisfaction in e-commerce," *SAGE Open*, vol. 14, no. 1, pp. 1–17, 2024, doi: 10.1177/21582440231224250.

[25] C. M. Ringle, S. Wende, and J.-M. Becker, *SmartPLS 4*. Bönningstedt, Germany: SmartPLS GmbH, 2022. [Online]. Available: https://www.smartpls.com

[26] M. A. Saryatmo and V. Sukhotu, "The influence of the digital supply chain on operational performance: A study of the food and beverage industry in Indonesia," *Sustainability*, vol. 13, no. 9, p. 5109, 2021, doi: 10.3390/su13095109.

[27] M. M. H. Shahadat, M. Nekmahmud, P. Ebrahimi, and M. Fekete-Farkas, "Digital technology adoption in SMEs: What technological, environmental and organizational factors influence in emerging countries?" *Global Business Review*, 2023, doi: 10.1177/09721509221137199.

[28] M. S. Shakur, M. Lubaba, B. Debnath, A. B. M. M. Bari, and M. A. Rahman, "Exploring the challenges of Industry 4.0 adoption in the FMCG sector: Implications for resilient supply chain in emerging economy," *Logistics*, vol. 8, no. 1, p. 27, 2024, doi: 10.3390/logistics8010027.

[29] H. C. O. Unegbu, D. S. Yawas, and B. Dan-asabe, "The impact of digital transformation on Nigerian small and medium-sized enterprises (SMEs) in the global business landscape," *Jurnal Mekanikal*, vol. 47, no. 1, pp. 66–85, 2024, doi: 10.11113/jm.v47.478.

[30] L. von Bertalanffy, *General System Theory: Foundations, Development, Applications*. New York, NY, USA: George Braziller, 1968.

[31] J. C. Yadua, M. I. Nwoye, and U. A. Ibrahim, "Sustainable supply chain practices on organizational performance of selected fast-moving consumer goods companies in Nigeria," *Journal of Information Systems Engineering and Management*, vol. 10, no. 63s, pp. 1–12, 2025.

[32] A. Yousaf, A. Mishra, and A. Gupta, "'From technology adoption to consumption': Effect of pre-adoption expectations from fitness applications on usage satisfaction, continual usage, and health satisfaction," *Journal of Retailing and Consumer Services*, vol. 62, p. 102655, 2021, doi: 10.1016/j.jretconser.2021.102655.

[33] J. Zhang, W. Chen, N. Petrovsky, and R. M. Walker, "The expectancy-disconfirmation model and citizen satisfaction with public services: A meta-analysis and an agenda for best practice," *Public Administration Review*, vol. 82, no. 1, pp. 147–159, 2022, doi: 10.1111/puar.13368.